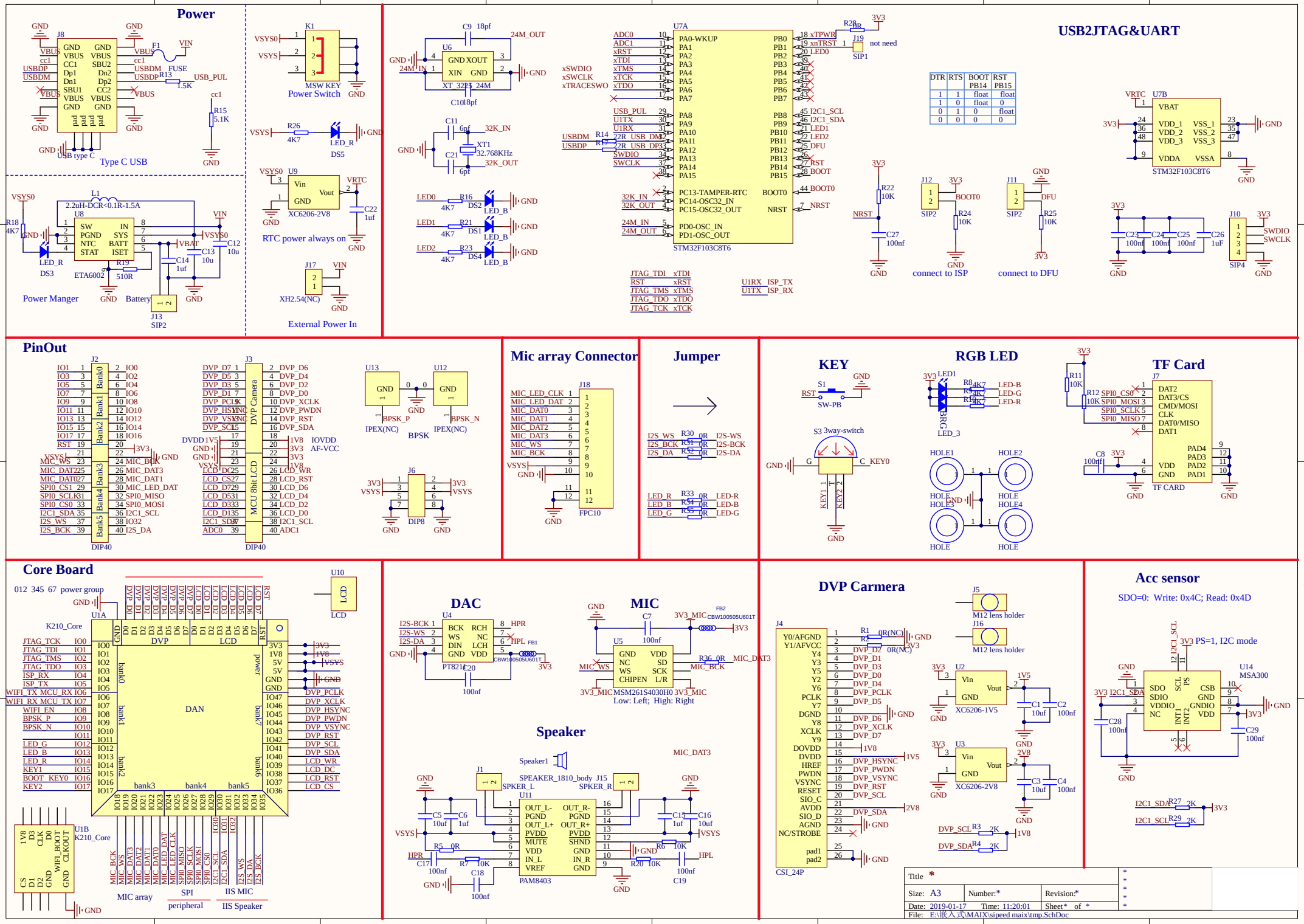
Power
Type C USB
Power Manger
Power Switch
RTC power always on
External Power In
USB2JTAG&UART
connect to ISP
connect to DFU
PinOut
Mic array Connector
Jumper
KEY
RGB LED
TF Card
Core Board
DAC
MIC
Speaker
DVP Carmera
Acc sensor
Low: Left; High: Right
Title *
Size: A3
Number:*
Revision:*
Date: 2019-01-17
Time: 11:20:01
Sheet* of *
File: E:\嵌入式\MAIX\sipeed maix\tmp.SchDoc